5/2, 5/3 and 2x3/2 directional control valves

VM15-GM series - 1/8”

Type	Spool valves, electrically or pneumatically operated, with manual override
Ways / Positions	5/2 - 5/3 - 2x3/2 valves in the same housing
Mounting	Inline
Port sizes	Working: G 1/8” - Pilot: M3x0,5 - Pilot air exhaust: M3x0,5
Electric operator	ISO 15218 standard electric operator with manual override.
Rated temperature	-5...50 °C (23...122 °F)
Medium temperature	-10...60 °C (14...140 °F)
Fluid	Filtered compressed air (lubrication recommended) - Inert gases
Working pressure	See table for each model
Nominal flow	700 LN/min (0,70 Cv) (5/2 and 3/2 version)
Frequency	24 Hz (with pneumatic return at 6 bar)
Materials	Aluminum housing, stainless steel spool, NBR seals

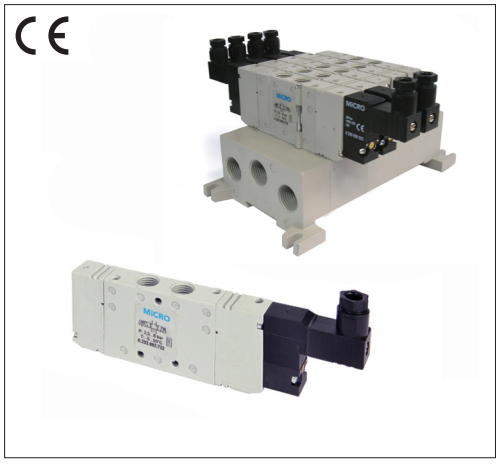

To obtain the maximum flow available in these valves, it is recommended to use G1/8” push-in fittings with enlarged nominal diameter (see page 2.2.4.11).

	Description	Working pressure	VM15 “GM”	Spare kit
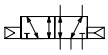	5/2 pneumatically operated valve pneumatic return	2,5...8 bar	0.256.001.311	0.200.001.413
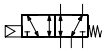	5/2 pneumatically operated valve spring return	2,5...8 bar	0.256.001.511	0.200.001.413
	5/2 pneumatically operated valve	1...8 bar	0.256.001.711	0.200.001.413
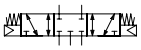	5/3 pneumatically operated valve closed centre	2,5...8 bar	0.256.001.911	0.200.001.413
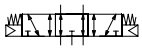	5/3 pneumatically operated valve open centre	2,5...8 bar	0.256.002.111	0.200.001.413
	5/2 electrically operated valve pneumatic return	2,5...8 bar	**0.256.002.311/---**	0.200.001.414
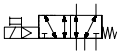	5/2 electrically operated valve spring return	2,5...8 bar	**0.256.002.511/---**	0.200.001.414
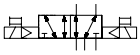	5/2 electrically operated valve	1...8 bar	**0.256.002.711/---**	0.200.001.415
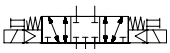	5/3 electrically operated valve closed centre	2,5...8 bar	0.256.002.911/---	0.200.001.415
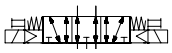	5/3 electrically operated valve open centre	2,5...8 bar	0.256.003.111/---	0.200.001.415
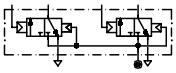	2 x 3/2 NC pneumatically operated valves	2,5...8 bar	0.256.008.511	0.200.001.413
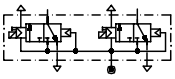	2 x 3/2 NC electrically operated valves	2,5...8 bar	**0.256.009.111 /---**	0.200.001.415
Tools (for Spare kits)				0.000.036.097

Pneumatic actuated valve

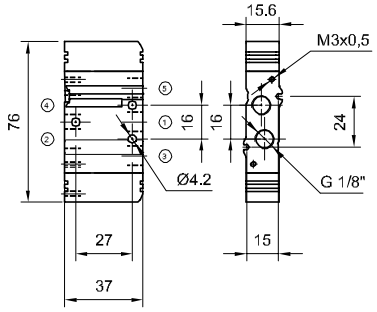

Single solenoid actuated valve

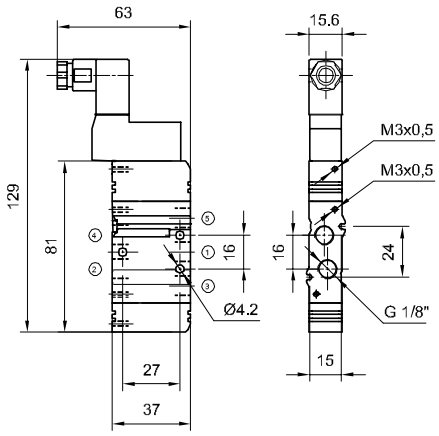

Double solenoid actuated valve

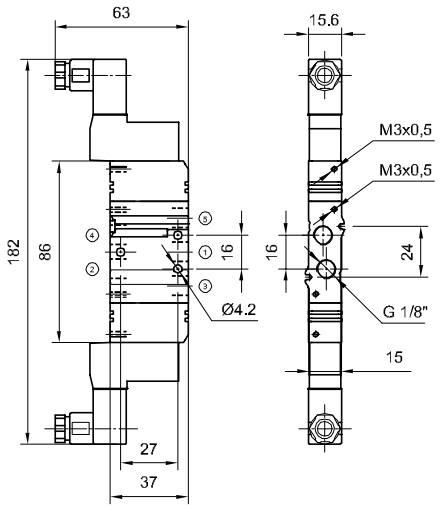

To specify solenoid voltage, dashes must be replaced by values in the table.
i.e.: a valve 0.256.002.311 / - - - with voltage 220V 50/60Hz, should be ordered as 0.256.002.311 / 901

Additional code / ---	Voltage
901	220/230V - 50/60Hz
902	110V - 50/60Hz
903	24V - 50/60Hz
923	24 Vcc
913	12 Vcc

For more features of the solenoids, please see page 2.6.1.1

Pneumatic connection

Any connector from chapter 8 can be used.
Although, to obtain the maximum flow available, it is recommended to use G1/8” push-in fittings with enlarged nominal diameter shown below.

Type	Thread	Tube outer diameter	MiCRO
Straight	M3x0,5	4	**0.451.010.409**
Elbow	M3x0,5	4	**0.451.990.409**
Straight	G 1/8”	8	**0.441.010.810**

Modular multiple subplate for 2 valves

This development is made up of modular manifolds units that allow the incorporation of two valves each.

The maximum number of modular manifold bases to be used will depend on the flow required in each valve and the simultaneous use of the same. A maximum of 8 modules (16 valves) is recommended.
For special executions, consult our technical department.

VM15 GM Modular Manifold (double)	End plates (pair)
0.200.001.325	**0.200.001.326**

Accessories	MiCRO
Blanking plate	**0.200.000.941**
Pressure divider	**0.200.001.383**

”n” equals the number of bases available for two valves.

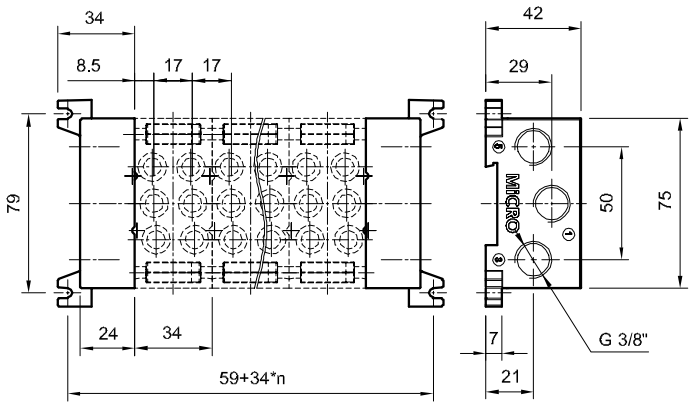

Type	3/2 Electro-pneumatic operator, normally closed, 15 mm width
Manual override	One stable position
Working pressure	0...8 bar
Nominal size	0,8 mm
Nominal flow rate	16 LN/min (at 6 bar)
Fluids	Compressed air or neutral gases, filtered at 50 µ, without lubrication
ED connection	100%
Electrically operated	ISO 15218
Degree of protection	IP 65 (with the socket adjusted)
Ambient temperature	-10...50 ºC (14...122 ºF)
Response time	5 - 15 ms
Insulation class	F (CEI 85)

Voltage	Power	MiCRO
220/230 V 50/60 Hz	3 VA	0.200.000.901
110V 50/60Hz	3 VA	0.200.000.902
24V 50/60Hz	3 VA	0.200.000.903
24 Vcc	1 W	0.200.000.923
12 Vcc	1 W	0.200.000.913

15 Illuminated Socket

Internal socket turnable each 90º

Voltage	LED color	MiCRO
220 Vca	Red	**0.200.001.220**
110 Vca	Yellow	**0.200.001.221**
24 Vca	Green	**0.200.001.222**
24 Vcc	Green	**0.200.001.223**
12 Vcc	Green	**0.200.001.224**

Adapting plate to CNOMO standard

Description	MiCRO
Adapting plate	0.200.000.939
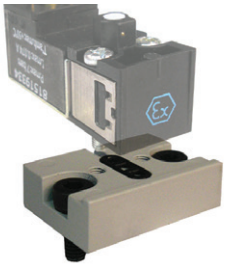
Used to apply these solenoids to VS, CH and AZ series valves, when low power comsumption is required.